# BIE 5300/6300 Assignment #10
# Drop Spillway Design

2 Dec 04 (due 7 Dec 04)

*Show your calculations in an organized and neat format. Indicate any assumptions or relevant comments.*

**Given:**

- The design flow rate for an earthen canal is 120.0 cfs.
- There is a 7.5-ft drop in canal bed elevation at a location in the canal.
- The average base width of the canal is 10 ft, and the average inverse side slope is 2:1, for a trapezoidal cross section.
- The canal longitudinal bed slope is 0.000125 ft/ft upstream of the drop location, and downstream of the drop location it is 0.000129 ft/ft.
- The average water temperature in the canal is 65°F.
- Assume a Manning roughness of 0.018 for the earthen canal.
- Assume uniform flow conditions at the design flow rate in the downstream channel.
- Forty percent of the canal flow rate is delivered to agricultural water users, and the rest goes to municipal water users.

**Required:**

1. Design a drop spillway for the given conditions at the location of the 7.5-ft drop.
2. Use English units for the design.
3. Use the design procedure given in the lecture notes, but iterate to make the basin area (b x L) as small as feasible at the design flow rate; however, if possible, do not make the basin width, b, greater than the average base width of the earthen canal.
4. Add 10% to the upstream normal depth for freeboard, determining the height of the headwall at the upstream sides of the stilling basin.
5. Produce side view and plan view technical drawings of the drop spillway, indicating the dimensions of the energy dissipation structure.

**A Design Solution:**

***I. Uniform-Flow Depths***

- From the ACA program, the following uniform-flow depths were found:

    - Upstream normal depth: 3.91 ft
    - Downstream normal depth: 3.88 ft

  both of which are for the design flow rate of 120 cfs.

***II. Minimum Stilling Basin Area***

- The stilling basin width is limited to a maximum of b = 10.0 ft in this problem.
- Start at this limit and decrease b incrementally to find the minimum area (L x b).
- Set up calculations in a spreadsheet, using the equations from the lecture notes.

| b (ft) | $h_c$ (ft) | $y_{end}$ (ft) | $h_t$ (ft) | $2.15h_c$ (ft) | Eq. 14 | $y_{drop}$ (ft) | $x_f$ (ft) | $x_t$ (ft) | $x_s$ (ft) | $x_a$ (ft) | $x_b$ (ft) | $x_c$ (ft) | L (ft) | L x b (sq ft) |
|---|---|---|---|---|---|---|---|---|---|---|---|---|---|---|
| 10.0 | 1.648 | 0.659 | 4.540 | 3.542 | OK | -8.159 | 7.555 | 5.232 | 8.013 | 7.784 | 1.318 | 2.883 | 11.985 | 119.850 |
| 9.5 | 1.705 | 0.682 | 4.563 | 3.665 | OK | -8.182 | 7.702 | 5.337 | 8.167 | 7.935 | 1.364 | 2.983 | 12.282 | 116.680 |
| 9.0 | 1.767 | 0.707 | 4.588 | 3.800 | OK | -8.207 | 7.861 | 5.450 | 8.334 | 8.098 | 1.414 | 3.093 | 12.605 | 113.442 |
| 8.5 | 1.836 | 0.734 | 4.615 | 3.948 | OK | -8.234 | 8.034 | 5.572 | 8.515 | 8.274 | 1.469 | 3.213 | 12.956 | 110.130 |
| 8.0 | 1.912 | 0.765 | 4.646 | 4.110 | OK | -8.265 | 8.223 | 5.706 | 8.712 | 8.467 | 1.529 | 3.346 | 13.342 | 106.739 |
| 7.5 | 1.996 | 0.798 | 4.679 | 4.291 | OK | -8.298 | 8.429 | 5.854 | 8.928 | 8.679 | 1.597 | 3.493 | 13.768 | 103.260 |
| 7.0 | 2.090 | 0.836 | 4.717 | 4.493 | OK | -8.336 | 8.657 | 6.016 | 9.166 | 8.912 | 1.672 | 3.657 | 14.241 | 99.685 |
| 6.5 | 2.196 | 0.878 | 4.759 | 4.721 | OK | -8.378 | 8.911 | 6.198 | 9.431 | 9.171 | 1.757 | 3.842 | 14.770 | 96.004 |
| 6.0 | 2.316 | 0.926 | 4.807 | 4.979 | invalid | -8.426 | 9.195 | 6.401 | 9.728 | 9.462 | 1.853 | 4.053 | 15.367 | 92.205 |
| 5.5 | 2.454 | 0.982 | 4.863 | 5.277 | invalid | -8.482 | 9.518 | 6.633 | 10.064 | 9.791 | 1.963 | 4.295 | 16.049 | 88.272 |
| 5.0 | 2.615 | 1.046 | 4.927 | 5.623 | invalid | -8.546 | 9.887 | 6.898 | 10.450 | 10.168 | 2.092 | 4.577 | 16.838 | 84.188 |

- It is noted that b $\leq$ 6.0 ft violates Eq. 14.
- In the above table, b = 6.5 ft gives the lowest basin area (96 $ft^2$).
- More precisely, b $\approx$ 6.41 ft gives the minimum value without violating Eq. 14:

| b (ft) | $h_c$ (ft) | $y_{end}$ (ft) | $h_t$ (ft) | $2.15h_c$ (ft) | Eq. 14 | $y_{drop}$ (ft) | $x_f$ (ft) | $x_t$ (ft) | $x_s$ (ft) | $x_a$ (ft) | $x_b$ (ft) | $x_c$ (ft) | L (ft) | L x b (sq ft) |
|---|---|---|---|---|---|---|---|---|---|---|---|---|---|---|
| 6.50 | 2.196 | 0.878 | 4.759 | 4.721 | OK | -8.378 | 8.911 | 6.198 | 9.431 | 9.171 | 1.757 | 3.842 | 14.770 | 96.004 |
| 6.49 | 2.198 | 0.879 | 4.760 | 4.725 | OK | -8.379 | 8.916 | 6.201 | 9.437 | 9.177 | 1.758 | 3.846 | 14.781 | 95.930 |
| 6.48 | 2.200 | 0.880 | 4.761 | 4.730 | OK | -8.380 | 8.922 | 6.205 | 9.442 | 9.182 | 1.760 | 3.850 | 14.792 | 95.855 |
| 6.47 | 2.202 | 0.881 | 4.762 | 4.735 | OK | -8.381 | 8.927 | 6.209 | 9.448 | 9.188 | 1.762 | 3.854 | 14.804 | 95.780 |
| 6.46 | 2.205 | 0.882 | 4.763 | 4.740 | OK | -8.382 | 8.932 | 6.213 | 9.454 | 9.193 | 1.764 | 3.858 | 14.815 | 95.705 |
| 6.45 | 2.207 | 0.883 | 4.764 | 4.745 | OK | -8.383 | 8.938 | 6.217 | 9.459 | 9.199 | 1.766 | 3.862 | 14.826 | 95.630 |
| 6.44 | 2.209 | 0.884 | 4.765 | 4.750 | OK | -8.384 | 8.943 | 6.221 | 9.465 | 9.204 | 1.767 | 3.866 | 14.838 | 95.555 |
| 6.43 | 2.212 | 0.885 | 4.766 | 4.755 | OK | -8.385 | 8.949 | 6.225 | 9.471 | 9.210 | 1.769 | 3.870 | 14.849 | 95.480 |
| 6.42 | 2.214 | 0.886 | 4.767 | 4.760 | OK | -8.386 | 8.954 | 6.229 | 9.476 | 9.215 | 1.771 | 3.874 | 14.861 | 95.405 |
| 6.41 | 2.216 | 0.886 | 4.767 | 4.765 | OK | -8.386 | 8.960 | 6.232 | 9.482 | 9.221 | 1.773 | 3.878 | 14.872 | 95.330 |
| 6.40 | 2.218 | 0.887 | 4.768 | 4.770 | invalid | -8.387 | 8.965 | 6.236 | 9.488 | 9.226 | 1.775 | 3.882 | 14.883 | 95.254 |

- Choose a stilling basin width of b = 6.5 ft (rounding up to the nearest half foot).
- Then,

    - $h_c$ = 2.20 ft
    - $x_a$ = 9.17 ft
    - $x_b$ = 1.76 ft
    - $x_c$ = 3.84 ft
    - L = 14.77 ft
    - $h_t$ = 4.76 ft
    - $y_{end}$ = 0.88 ft
    - $y_{drop}$ = -8.38 ft

- Some of the above values could be rounded up, but in this design they will remain as calculated (other dimensions will be rounded, as shown below).

### *III. Headwall & Wingwalls*

- Adding 10% to the upstream normal depth (as specified), the headwall height should be 1.1(3.91) = 4.30 ft above the origin, which is at the crest height.
- There will need to be a converging section at the stilling basin inlet because the stilling basin width is less than the upstream channel width. This is given a 45-degree convergence, as shown in the plan view drawing (see below).
- According to design procedures, the wingwall height at the end sill is to be $0.85h_c$ = 0.85(2.20) = 1.87 ft above the tail water surface.
- The side walls should slope linearly from the headwall to the beginning of the wingwalls over the length, L, of the stilling basin.
- Also according to design procedures, the wingwalls splay out at 45 degrees, and the tops slope downward at 45 degrees.
- Extending the wingwalls to intersect with the base of the downstream channel side slopes, the length of each wingwall will be:

$$L_{wing} = \sqrt{2\left(\frac{10.0 - 6.5}{2}\right)^2} = 2.47 \text{ ft}$$

- Round this up to 2.50 ft.
- Riprap and or other measures to help prevent erosion at and just downstream of the wingwalls will also be necessary to complete this design.

### *IV. Floor Block Sizing & Spacing*

- This design will follow the guidelines in which the floor blocks have the same width and length, which is equal to:

$$L_{blocks} = 0.5h_c = 0.5(2.20) = 1.10 \text{ ft}$$

- Floor block height will be:

$$y_{blocks} = 0.8h_c = 0.8(2.20) = 1.76 \text{ ft}$$

  which in this design will be rounded down to 1.75 ft.

- Number of floor blocks for 50% occupation of the stilling basin width:

$$N = \frac{6.5}{2(1.10)} = 2.95$$

  which in this design will be rounded up to three blocks.

- Equal block spacing across the stilling basin width gives:

$$\text{block spacing} = \frac{6.50 - 3(1.10)}{4} = 0.80 \text{ ft}$$

- Finally, the proportion of the stilling basin width occupied by the three floor blocks will be:

$$\text{occupied width} = 100\left(\frac{3(1.10)}{6.50}\right) = 50.8\%$$

  which is in the recommended range of 50 – 60%.

***V. Footings & Other Details***

- Footing depth: 2.00 ft.
- All concrete work to be steel reinforced.
- Concrete floor and wall thicknesses: 5 inches.
- No longitudinal sills required.

***VI. Drawings***

- Side and plan views: see below.

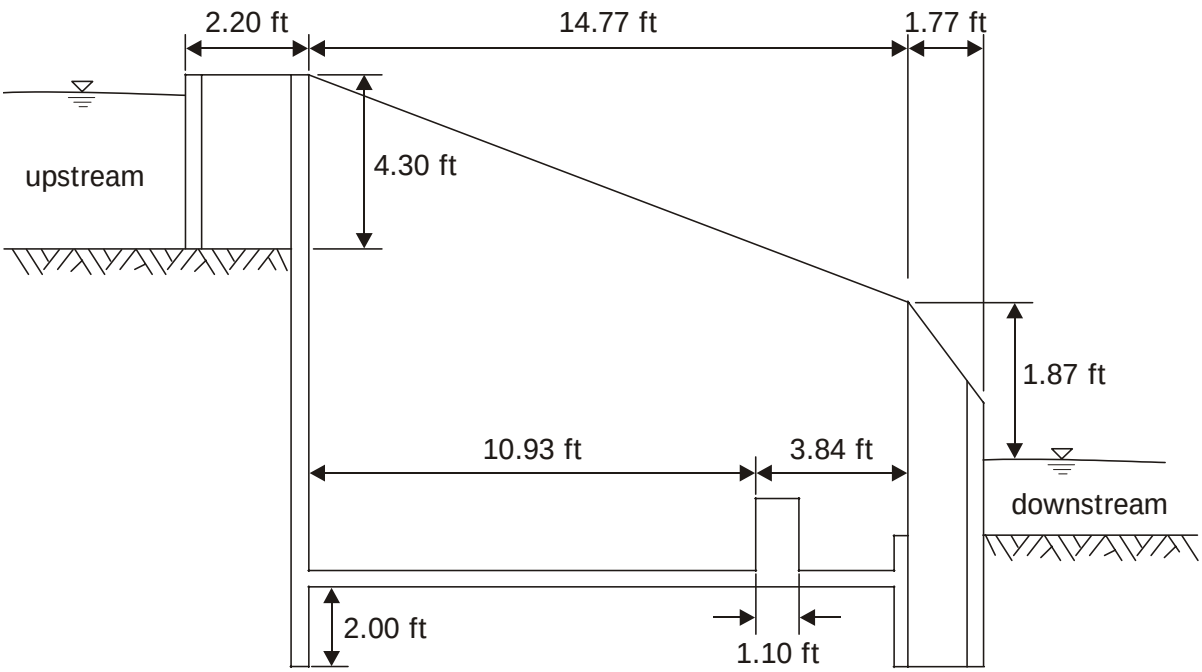


**Side View**

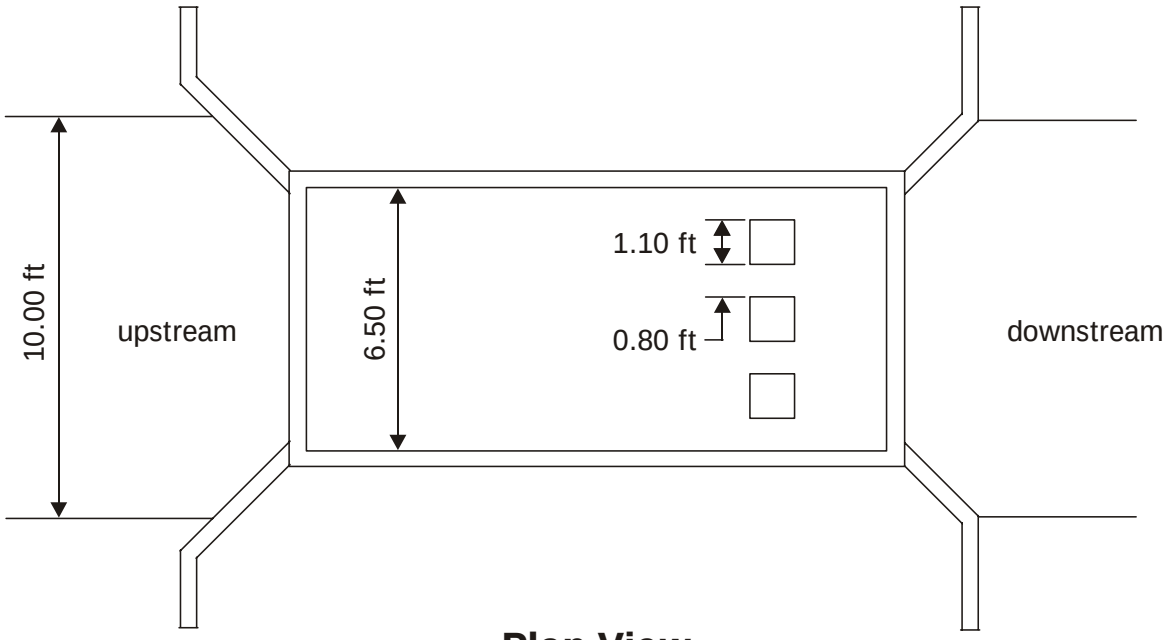


**Plan View**